Teak Composite Vertical 1 × 6 ft Decorative Panel, Pattern P01 Single Gate with Crossbeam

In-Ground
3.5 ft W × 6 ft H

2.4.2

Style#: WPV/SGDP16P01TK4DP1-42X72-CB-IG

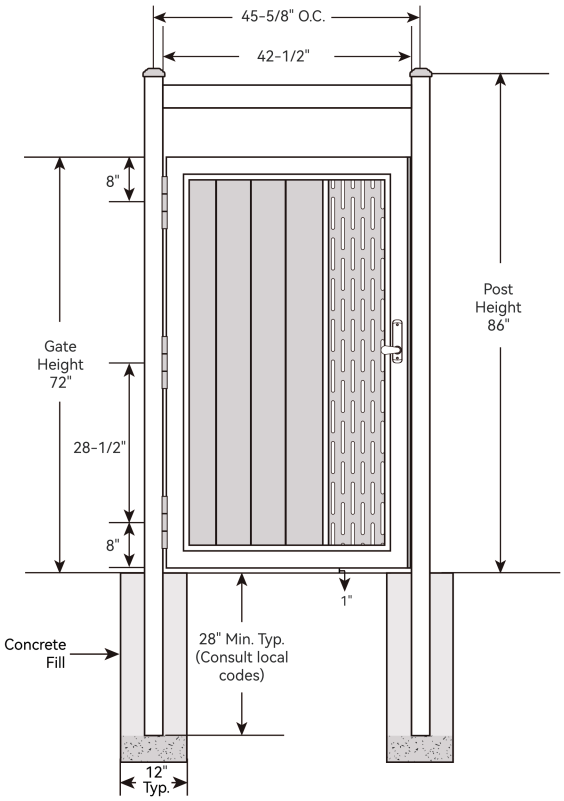

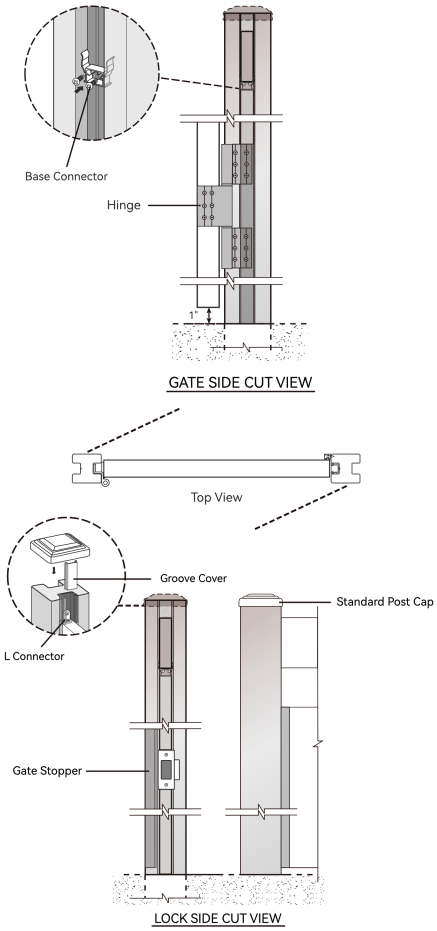

NOTES:
1. INSTALLATION TO BE COMPLETED PER MANUFACTURER'S SPECIFICATION.
2. REFER TO MyModernYard.com FOR CONSTRUCTION DETAILS AND PRODUCT INFORMATION.
3. DRAWING NOT TO SCALE.

COMPONENT	QTY.	LENGTH	MATERIAL
Standard Post Cap	2	N/A	Powder-Coated Aluminum
114-inch Steel Post	2	114"	Powder-Coated Galvanized Steel
3/4" U-Channel Rubber Strip	1	79-1/2"	Polyvinyl Chloride
	1	11"	
	2	1-1/2"	
71 x 42-inch Welded Gate Frame	1	N/A	Powder-Coated Aluminum
Gate Frame Cover Strip	4	N/A	Powder-Coated Aluminum
#8 x 3/4" ST Screw	23	N/A	410 Stainless Steel
#8 x 1-1/4" ST Screw	16	N/A	410 Stainless Steel
#10 x 1" ST Screw	54	N/A	410 Stainless Steel
Composite Fence Board	4	65"	Wood Plastic Composite
Gate Stopper	1	N/A	Powder-Coated Aluminum
Gate Stop Cover Plate	1	N/A	Powder-Coated Aluminum

Component lengths may vary.

COMPONENT	QTY.	LENGTH	MATERIAL
Hinge	3	N/A	Powder-Coated Aluminum
Groove Cover	1	37-7/8"	Powder-Coated Aluminum
	1	39"	
	1	11"	
	2	1-1/2"	
Crossbeam	1	44-1/4"	Powder-Coated Galvanized Steel
Base Connector	2	N/A	Powder-Coated Aluminum
L Connector	2	N/A	201 Stainless Steel
Mechanical Combination Lock	1	N/A	304 Stainless Steel
Decorative Panel	1	65"	Electrocoated and Powder-Coated Galvanized Steel
Decorative Panel Top Rail	1	65"	Powder-Coated Aluminum
Decorative Panel Bottom Rail	1	65"	Powder-Coated Aluminum
Decorative Panel Side Rail	2	10-1/4"	Powder-Coated Aluminum

MODERN YARD™

30042 Mission Blvd. Ste 121 Box #188
Hayward, CA 94544
1-510-695-2700 - MyModernYard.com

Copyright ©2025.Modern Yard LLC.All rights reserved.
Modification or reproduction is prohibited without written permission.