Private Black LINE Horizontal Full Privacy Metal Fence Panel

Surface Mount 2.4.1

8 ft W × 6 ft H

Style#: LNH/FPPB18-96X72-SM

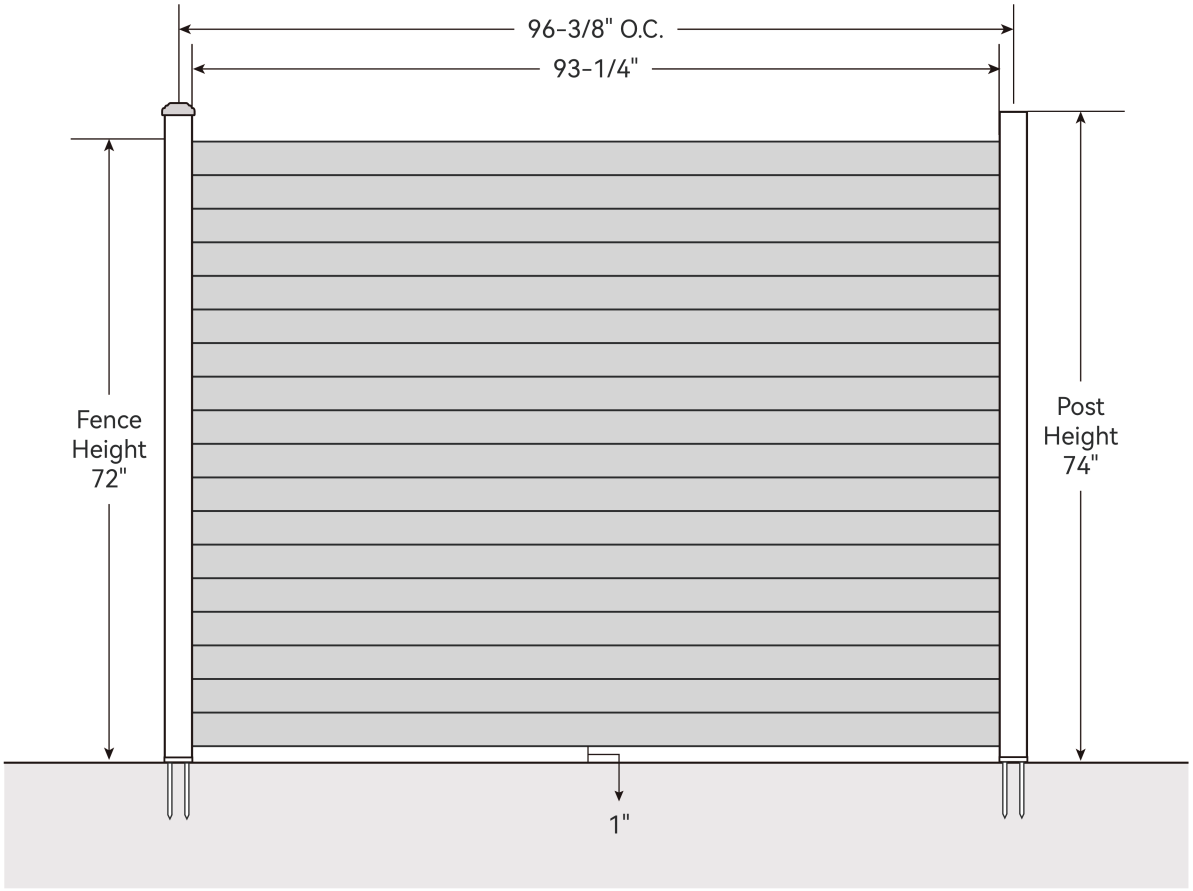

NOTES:

1. INSTALLATION TO BE COMPLETED PER MANUFACTURER'S SPECIFICATION.
2. REFER TO MyModernYard.com FOR CONSTRUCTION DETAILS AND PRODUCT INFORMATION.
3. DRAWING NOT TO SCALE.
4. ANCHORING HARDWARE NOT INCLUDED.

COMPONENT		QTY.	LENGTH	MATERIAL
Standard Post Cap		2	N/A	Powder-Coated Aluminum
74-inch Steel Post with Welded Base Plate		2	74"	Powder-Coated Galvanized Steel
3/4" U-Channel Rubber Strip		2	1-1/2"	Polyvinyl Chloride
Line™ Fence Slat		18	94-1/2"	Powder-Coated Galvanized Steel
Base Connector		2	N/A	Powder-Coated Aluminum
L Connector		2	N/A	201 Stainless Steel
#8 x 3/4" ST Screw		8	N/A	410 Stainless Steel
Groove Cover		2	1-1/2"	Powder-Coated Aluminum
Slot Insert Strip		4	74"	EVA (Ethylene Vinyl Acetate)

Component lengths may vary.

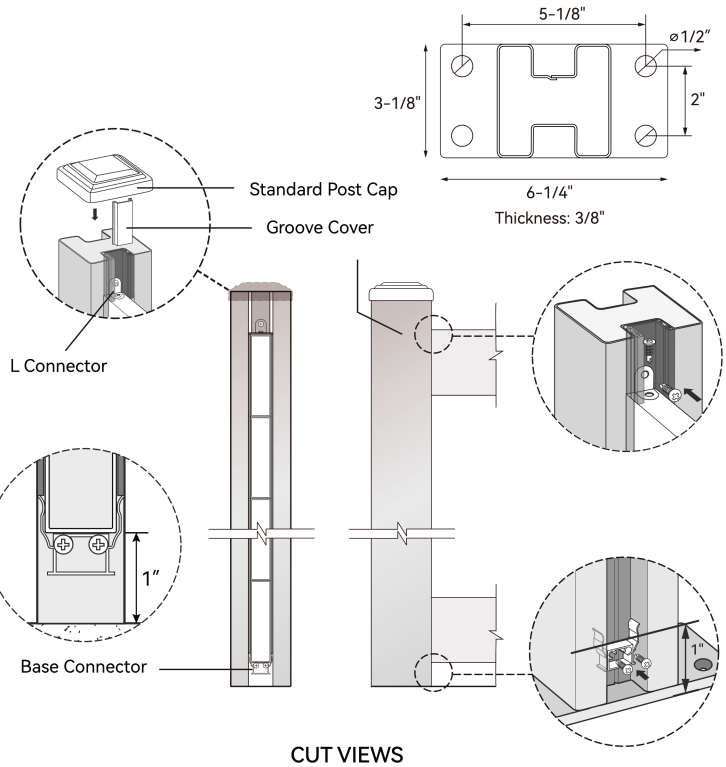

CUT VIEWS

MODERN YARD™

30042 Mission Blvd. Ste 121 Box #188
Hayward, CA 94544
1-510-695-2700 - MyModernYard.com

Copyright ©2025.Modern Yard LLC.All rights reserved.
Modification or reproduction is prohibited without written permission.

Private Black LINE Horizontal Full Privacy Metal Fence Panel

Surface Mount 2.4.1

8 ft W × 6 ft H

Style#: LNH/FPPB18-96X72-SM

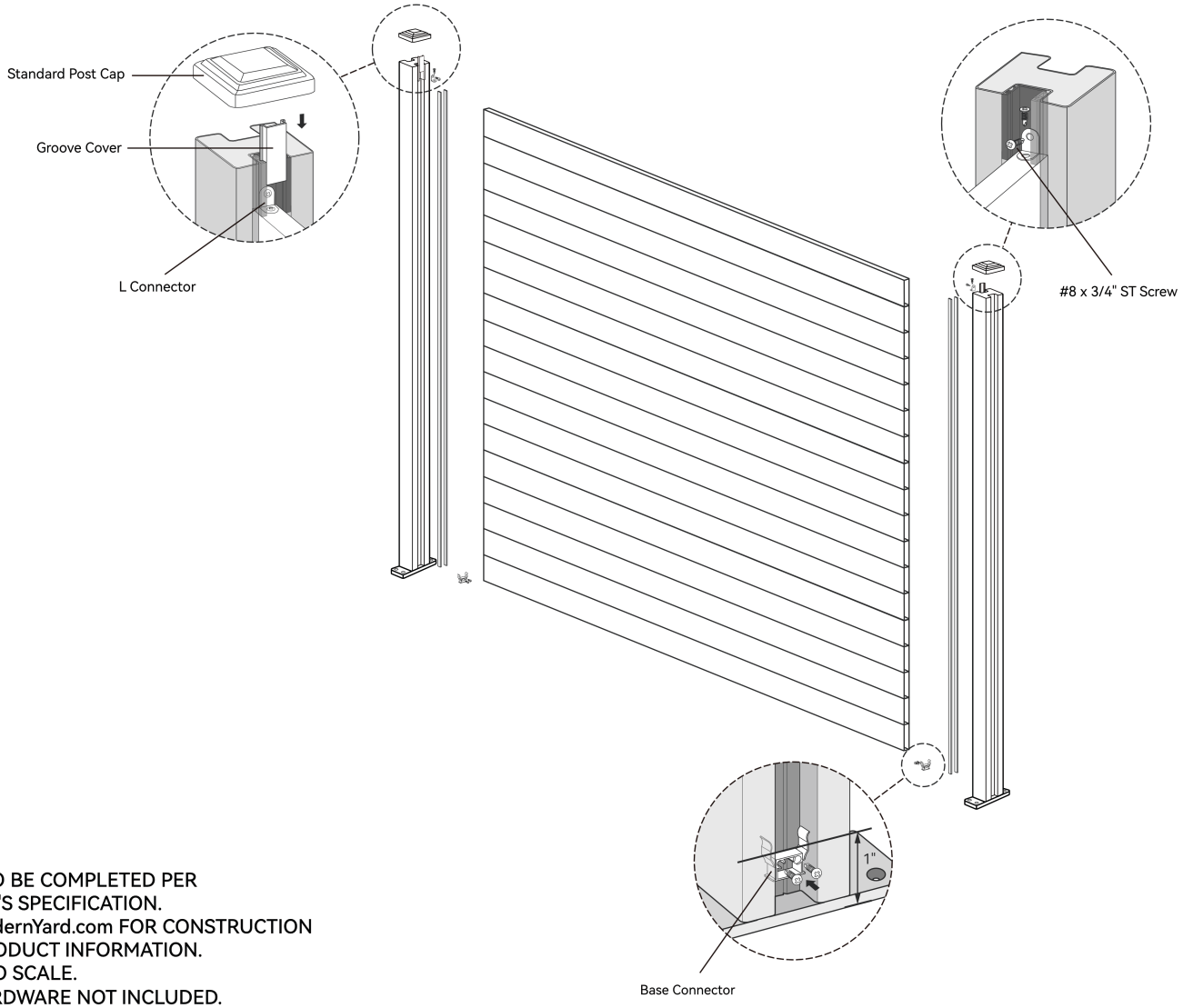

NOTES:

1. INSTALLATION TO BE COMPLETED PER MANUFACTURER'S SPECIFICATION.
2. REFER TO MyModernYard.com FOR CONSTRUCTION DETAILS AND PRODUCT INFORMATION.
3. DRAWING NOT TO SCALE.
4. ANCHORING HARDWARE NOT INCLUDED.

COMPONENT		QTY.	LENGTH	MATERIAL
Standard Post Cap		2	N/A	Powder-Coated Aluminum
74-inch Steel Post with Welded Base Plate		2	74"	Powder-Coated Galvanized Steel
3/4" U-Channel Rubber Strip		2	1-1/2"	Polyvinyl Chloride
Line™ Fence Slat		18	94-1/2"	Powder-Coated Galvanized Steel
Base Connector		2	N/A	Powder-Coated Aluminum
L Connector		2	N/A	201 Stainless Steel
#8 x 3/4" ST Screw		8	N/A	410 Stainless Steel
Groove Cover		2	1-1/2"	Powder-Coated Aluminum
Slot Insert Strip		4	74"	EVA (Ethylene Vinyl Acetate)

Component lengths may vary.

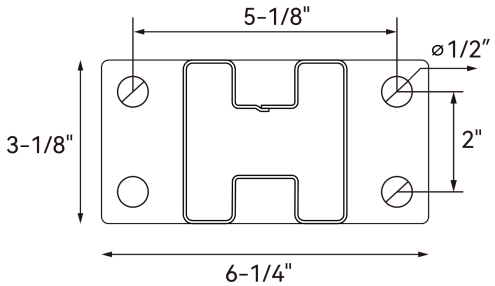

Thickness: 3/8"

MODERN YARD™

30042 Mission Blvd. Ste 121 Box #188
Hayward, CA 94544
1-510-695-2700 - MyModernYard.com

Copyright ©2025.Modern Yard LLC.All rights reserved.
Modification or reproduction is prohibited without written permission.