Redwood Composite Horizontal 1 × 6 ft Decorative Panel, Pattern P01 Single Gate

In-Ground 2.4.2

3.5 ft W × 6 ft H

Style#: WPH/SGDP16P01RD9DP1-42X72-IG

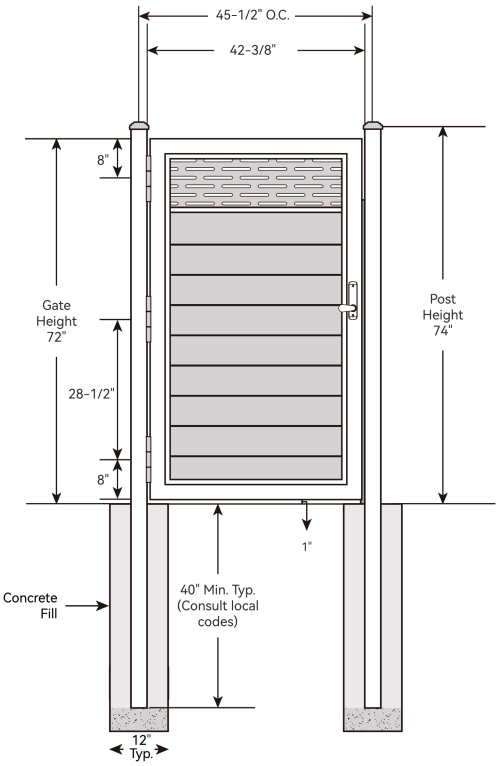

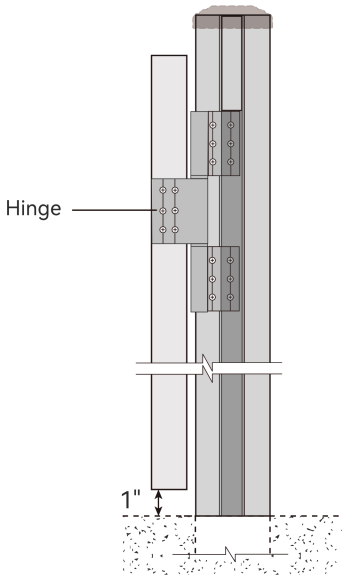

CUT VIEWS

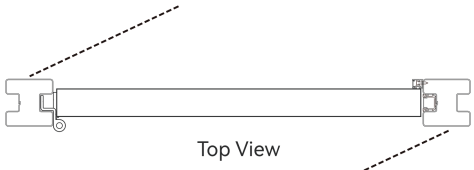

Top View

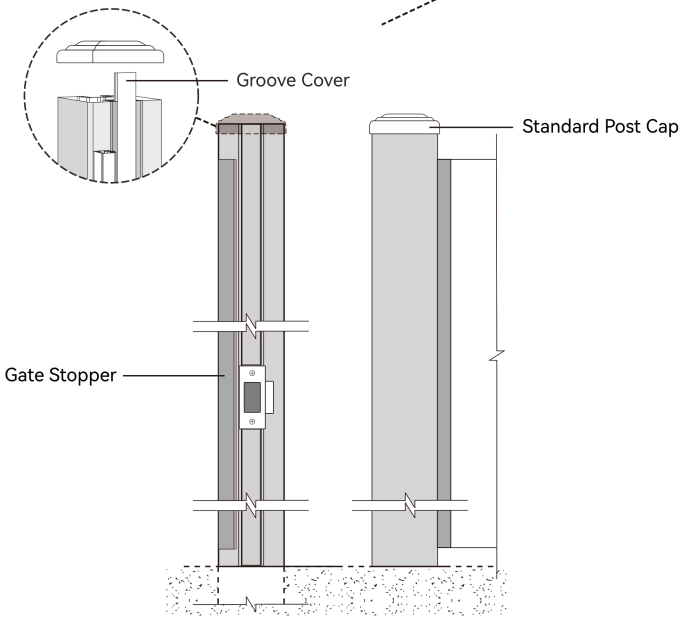

CUT VIEWS

COMPONENT		QTY.	LENGTH	MATERIAL
Standard Post Cap		2	N/A	Powder-Coated Aluminum
114-inch Steel Post		2	114"	Powder-Coated Galvanized Steel
3/4" U-Channel Rubber Strip		1	73-5/8"	Polyvinyl Chloride
		1	5-1/2"	
71 x 42-inch Welded Gate Frame		1	N/A	Powder-Coated Aluminum
Gate Frame Cover Strip		4	N/A	Powder-Coated Aluminum
#8 x 3/4" ST Screw		13	N/A	410 Stainless Steel
#8 x 1-1/4" ST Screw		16	N/A	410 Stainless Steel
#10 x 1" ST Screw		54	N/A	410 Stainless Steel
Composite Fence Board		9	35-3/8"	Wood Plastic Composite
Gate Stopper		1	N/A	Powder-Coated Aluminum
Gate Stop Cover Plate		1	N/A	Powder-Coated Aluminum
Hinge		3	N/A	Powder-Coated Aluminum
Groove Cover		1	32-3/8"	Powder-Coated Aluminum
		1	39"	
		1	5-1/2"	
Mechanical Combination Lock		1	N/A	304 Stainless Steel
Decorative Panel		1	35-3/8"	Electrocoated and Powder-Coated Galvanized Steel
Decorative Panel Top Rail		1	35-3/8"	Powder-Coated Aluminum
Decorative Panel Bottom Rail		1	35-3/8"	Powder-Coated Aluminum
Decorative Panel Side Rail		2	10-1/4"	Powder-Coated Aluminum

Component lengths may vary.

NOTES:

1. INSTALLATION TO BE COMPLETED PER MANUFACTURER'S SPECIFICATION.
2. REFER TO MyModernYard.com FOR CONSTRUCTION DETAILS AND PRODUCT INFORMATION.
3. DRAWING NOT TO SCALE.

MODERN YARD™

30042 Mission Blvd. Ste 121 Box #188
Hayward, CA 94544
1-510-695-2700 - MyModernYard.com

Copyright ©2025.Modern Yard LLC.All rights reserved.
Modification or reproduction is prohibited without written permission.