Private Black LINE Horizontal Semi-Privacy Metal Fence Panel with Half-Inch Gaps

In-Ground 2.4.1

8 ft W × 3.5 ft H

Style#: LNH/G05PB9-96X42-IG

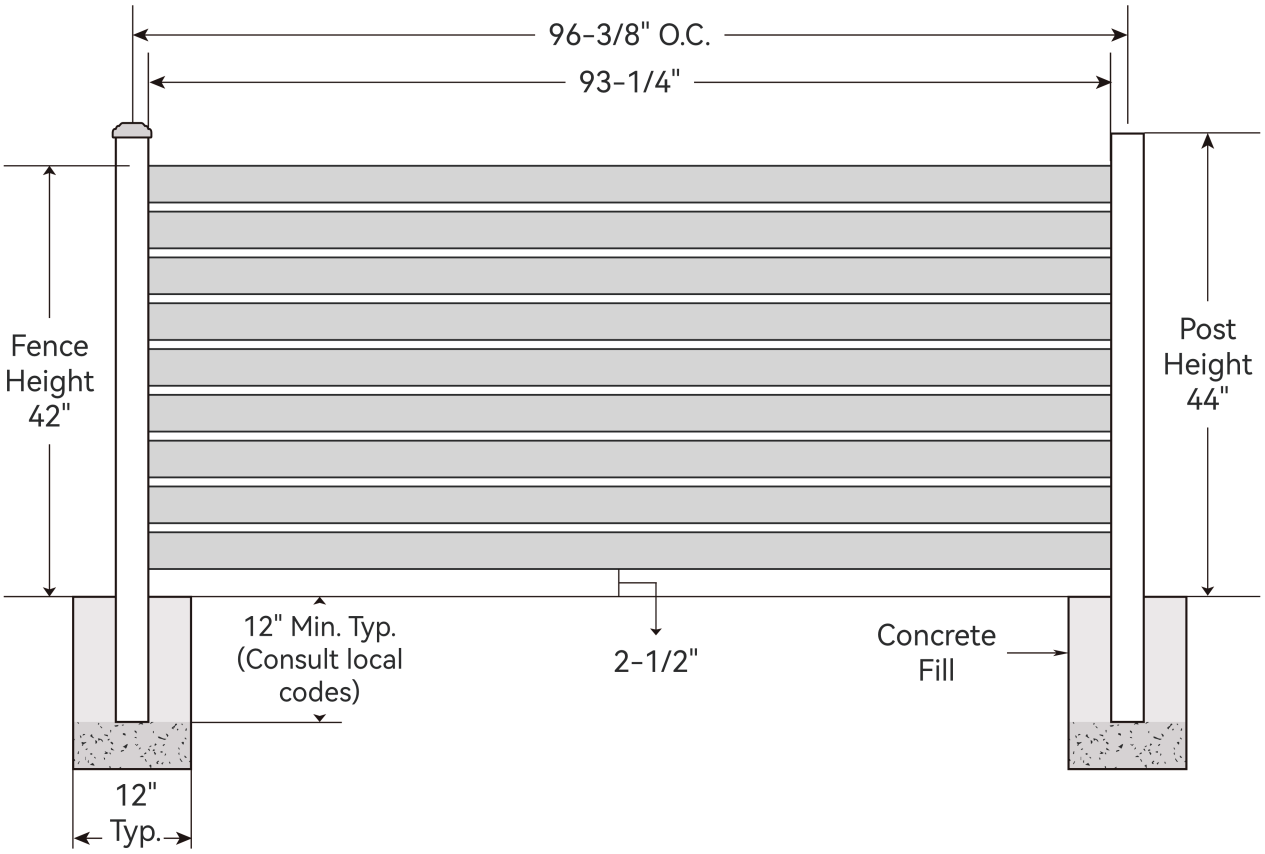

NOTES:

1. INSTALLATION TO BE COMPLETED PER MANUFACTURER'S SPECIFICATION.
2. REFER TO MyModernYard.com FOR CONSTRUCTION DETAILS AND PRODUCT INFORMATION.
3. DRAWING NOT TO SCALE.

COMPONENT		QTY.	LENGTH	MATERIAL
Standard Post Cap		2	N/A	Powder-Coated Aluminum
114-inch Steel Post		1	56" (cut to half)	Powder-Coated Galvanized Steel
3/4" U-Channel Rubber Strip		2	1-1/2"	Polyvinyl Chloride
Line™ Fence Slat		9	94-1/2"	Powder-Coated Galvanized Steel
Base Connector		2	N/A	Powder-Coated Aluminum
Stackable Connector		16	N/A	Powder-Coated Aluminum
L Connector		2	N/A	201 Stainless Steel
#8 x 3/4" ST Screw		8	N/A	410 Stainless Steel
Groove Cover		2	1-1/2"	Powder-Coated Aluminum

Component lengths may vary.

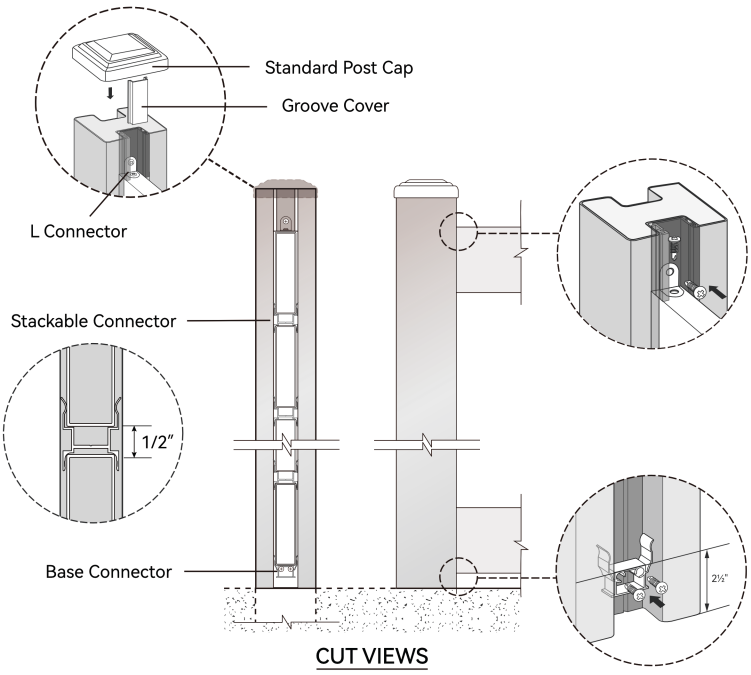

CUT VIEWS

MODERN YARD™

30042 Mission Blvd. Ste 121 Box #188
Hayward, CA 94544
1-510-695-2700 - MyModernYard.com

Copyright ©2025.Modern Yard LLC.All rights reserved.
Modification or reproduction is prohibited without written permission.